BEATTY SECONDARY SCHOOL
END OF YEAR EXAMINATION 2015

SUBJECT : Mathematics **LEVEL : Sec 2 Express**

PAPER : 1 **DURATION : 1 hour 15 minutes**

SETTER : Mr Lee Chau Loong **DATE : 5 Oct 2015**

CLASS :	NAME :	REG NO :

READ THESE INSTRUCTIONS FIRST

Write your name, class and index number in the spaces on the top of this page.
Write in dark blue or black pen.
You may use a pencil for any diagrams or graphs.
Do not use staples, paper clips, highlighters, glue or correction fluid.

Answer **all** questions.

If working is needed for any question, it must be shown with the answer.
Omission of essential working will result in loss of marks.
You are expected to use a scientific calculator to evaluate explicit numerical expressions.
If the degree of accuracy is not specified in the question, and if the answer is not exact, give the answer to three significant figures. Give answers in degrees to one decimal place.
For π, use either your calculator value or 3.142, unless the question requires the answer in terms of π.

The number of marks is given in brackets [ ] at the end of each question or part question.
The total number of marks for this paper is **50**.

For Examiner's Use
50

This paper consists of 11 printed pages (including this cover page)

Answer all the questions

For Examiner's Use

For Examiner Use

1 Expand and simplify $2(2-m)^2 - m(5-4m)$.

Answer : ..... [2]

2 The mean weight of 40 students in a class is 52.6 kilograms. After one student is removed from the class, the mean weight decreased to 52.2 kilograms.
Find the weight of the student who was removed from the class.

Answer : .....kg [2]

3 Given that $a-b=3$ and $ab=5$, find, without the use of a calculator, the value of a^2+b^2.

Answer : ..... [2]

For Examiner's Use

4 y is inversely proportional to the square of x. When $x = 4$, $y = 0.25$.

(a) Find the values of x when $y = 25$.

Answer (a): $x =$ ..... [3]

(b) Describe the change in y when x is halved.

Answer (b): .....

.....

..... [1]

5 **(a)** Solve $3x^2 + 7x - 6 = 0$.

Answer (a): $x =$ ..... [2]

(b) Hence state the positive value of y for which $\frac{3}{y^2} + \frac{7}{y} - 6 = 0$.

Answer (b): $y =$ ..... [1]

For Examiner's Use

For Examiner Use

6 Factorise completely

(a) $28x^2 - 343$

Answer (a): ..... [2]

(b) $6a^2 - 3ay - 8y + 16a$

Answer (b): ..... [2]

7 A crane arm 20 meters long lowers a parcel from A to B. When the parcel is at A, the crane arm makes an angle of 55° with the horizontal. When the parcel is at B, the crane arm makes an angle of 20° with the horizontal.
Find the vertical distance moved by the parcel.

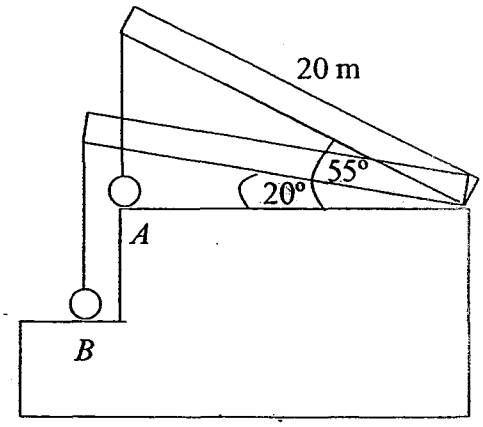

Answer : ..... m [3]

8 **(a)** Triangle ABC and triangle PQR are congruent.
$BC = 6$ cm, $PR = 15$ cm and angle $ABC = 90°$.

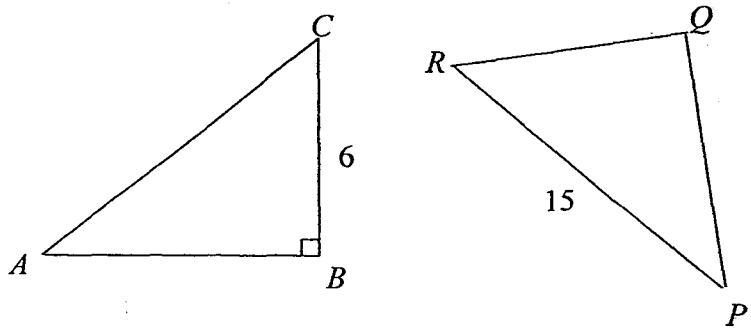

Find angle PRQ.

Answer (a): ..... [2]

(b) A right pyramid with square base of side 2 cm has a volume of 20 cm^3.

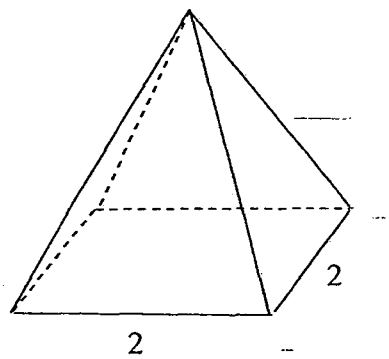

Calculate the height of the pyramid.

Answer (b): ..... cm [2]

For Examiner's Use

9 The waiting times, to the nearest minute, of twelve customers queuing at the cashier of a supermarket are recorded as a list:

4, 3, 4, 2, 5, 3, 4, 1, 2, 6, 3, 4

(a) Complete the dot diagram.

Answer (a): [1]

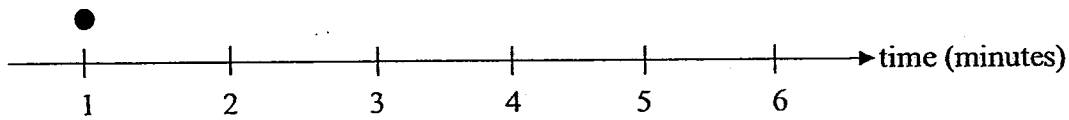

(b) Find the median.

Answer (b): ..... minutes [1]

(c) Find the mode.

Answer (c): ..... minutes [1]

(d) The supermarket manager claims that the distribution of waiting times is evenly distributed. Do you agree with his claim? Give a reason for your answer.

Answer (d): I agree/disagree because .....

.....

..... [1]

For Examiner Use

10 Each letter of the word "PIONEERS" is written on an identical card. The cards are then placed inside a box. Rainee picks a card at random from the box.

Find the probability that

(a) the letter P is chosen,

Answer (a): ..... [1]

(b) the letter A is chosen,

Answer (b): ..... [1]

(c) the letter E or S is chosen,

Answer (c): ..... [1]

(d) a letter with a horizontal line of symmetry is chosen.

Answer (d): ..... [1]

For Examiner's Use

For Examiner Use

11 Solve the following equations.

(a) $\dfrac{x+3}{7} - \dfrac{4x-5}{6} = x$

Answer (a): $x =$ ..... [2]

(b) $\dfrac{y-1}{y+2} = \dfrac{y}{3y+2}$

Answer (b): $y =$ ..... [3]

12 A solid cylinder of base radius 8 cm and length 25 cm has a square cross section of diagonal 12 cm removed from the cylinder, as shown in the diagram.

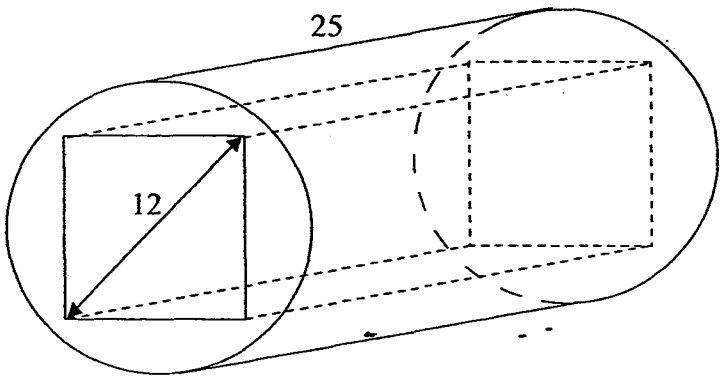

Find the total surface area of the remaining solid.

Answer : ..... cm^2 [5]

For Examiner's Use

13 The Day Safari charges \$$x$ for an adult ticket and \$$y$ for a child ticket.
The Lee family consists of 2 adults and 3 children. They paid a total of \$49.
The Lim family consists of 3 adults and 1 child. They paid a total of \$56.
Write down two equations in terms of x and y.
Hence find the value of x and of y.

Answer : $x =$ ....., $y =$ ..... [4]

14 Thomas measured the heights of 30 students in his class. The table below shows the results.

Heights (cm)	Frequency
$130 < h \leq 140$	6
$140 < h \leq 150$	k
$150 < h \leq 160$	8
$160 < h \leq 170$	5

For Examiner's Use

14 **(a)** Find the value of k.

Answer (b): $k =$ ..... [1]

(b) On the grid below, draw the histogram representing the data.
Use a scale of 2 cm to 10 cm on the horizontal h-axis.

Answer (b): [2]

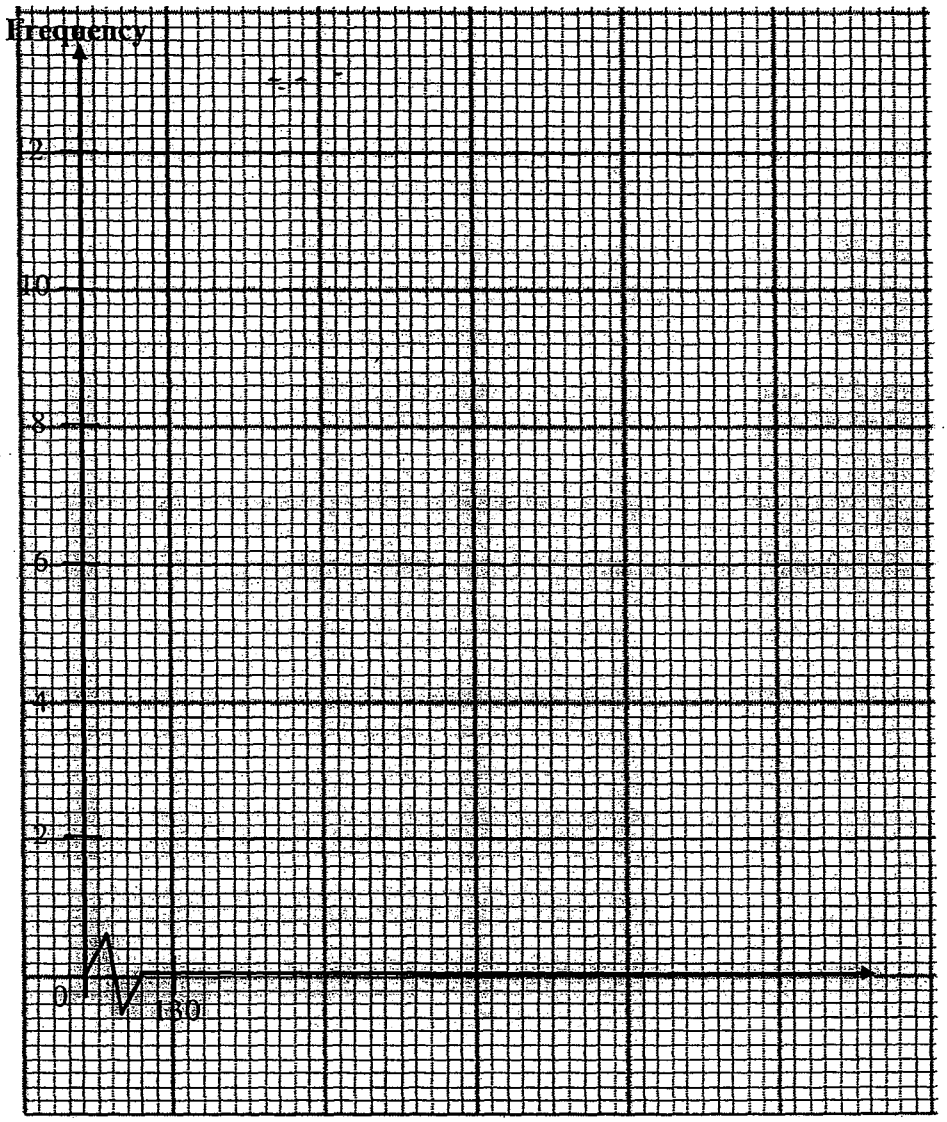

(c) Give one reason why a histogram is better than a pie chart.

Answer (c): .....

.....

..... [1]

End of Paper

Answer Key

1. 14.4 km/h
2(a) 30° (b) 20° (c) 130°
3(a) 120° (b) 13 cm
4(a) $x=\frac{y}{2}$ (b) $m+n=5q$
5(a) $a=-1$ (b) $c=-2$
6. $x=6\frac{2}{3}$ cm
7(a) 70° (b) 70° (c) 110°
8(a) $5x+5$ (b) $6x-3$ (c) $\frac{4x+3}{6}$
9(a) 13.3 cm (b) 11.9 cm
10(a) 14.7 km (b) 6.75 kg
11(a) $a=20$ (b) $b=5.5$ (c) $c=1$
12(a) $2x$ (b) $x+3$ (c) $x=7$
13(a) 4.47 m (b) 12 cm (c) 19.2 cm

Solution and Mark Scheme

1.	$2(2-m)^2-m(5-4m)$ $=2(4-4m+m^2)-5m+4m^2$ $=8-8m+2m^2-5m+4m^2$ $=6m^2-13m+8$	M1 A1
2.	$40\times52.6-39\times52.2=2104-2035.8=68.2\text{kg}$	M1, A1
3.	$a^2+b^2=(a-b)^2+2ab$ $=3^2+2(5)$ $=19$	 M1 A1
4(a)	$y=\frac{k}{x^2}$ When $x=4$ and $y=0.25$, $0.25=\frac{k}{4^2}$ $k=4$ Hence $y=\frac{4}{x^2}$ or $yx^2=4$ When $y=25$, $25=\frac{4}{x^2}$ $x^2=\frac{4}{25}$ $x=-\frac{2}{5}$ or $\frac{2}{5}$	 M1 A1 A1
4(b)	When x is halved, the value of y is increased 4 times. Also accept: the value of y is multiplied by 4.	B1
5(a)	$3x^2+7x-6=0$ $(3x-2)(x+3)=0$ $x=\frac{2}{3}$ or $x=-3$	 M1 A1
5(b)	$\frac{1}{y}=\frac{2}{3} \Rightarrow y=1\frac{1}{2}$	B1

6(a)	$28x^2-343=7(4x^2-49)$ $=7(2x-7)(2x+7)$	M1 A1
6(b)	$6a^2-3ay-8y+16a=3a(2a-y)-8(y-2a)$ $=3a(2a-y)+8(2a-y)$ $=(3a+8)(2a-y)$	M1 A1
7	$\sin 55° = \frac{x}{20} \Rightarrow x=20\sin 55° = 16.383$ $\sin 20° = \frac{y}{20} \Rightarrow y=20\sin 20° = 6.8404$ 16.383 – 6.8404 = 9.54 m (3 sf)	M1 M1 A1
8(a)	$\cos\angle PRQ = \frac{6}{15}$ $\angle PRQ = \cos^{-1}\left(\frac{6}{15}\right) = 66.4°$ (1 dp)	M1 A1
8(b)	Set $\frac{1}{3}(2^2)h = 20$ $h = \frac{3\times 20}{2^2} = 15$ cm	M1 A1
9(a)	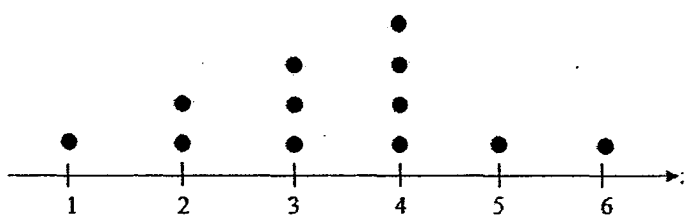	B1 – all correct
9(b)	$\frac{3+4}{2} = 3.5$	B1
9(c)	4	B1
9(d)	Agree, because there are more dots from 1 to 3 minutes as compared to 5 to 6 minutes. Accept: The number of dots at 2 and 5 minutes are not equal. The number of dots at 3 and 4 minutes are not equal.	B1

10(a)	$\frac{1}{8}$	B1
10(b)	0	B1
10(c)	$\frac{3}{8}$	B1
10(d)	The letters with horizontal line of symmetry are I, O, E $\frac{4}{8}=\frac{1}{2}$	B1
11(a)	$\frac{x+3}{7}-\frac{4x-5}{6}=x$ $\frac{6(x+3)-7(4x-5)}{42}=x$ $6x+18-28x+35=42x$ $-22x+53=42x$ $64x=53$ $x=\frac{53}{64}$	 M1 A1
11(b)	$\frac{y-1}{y+2}=\frac{y}{3y+2}$ $(y-1)(3y+2)=y(y+2)$ $3y^2-y-2=y^2+2y$ $2y^2-3y-2=0$ $(2y+1)(y-2)=0$ $y=-\frac{1}{2}$ or $y=2$	 M1 M1 A1

12	Curved surface area = $2\pi(8)(25)=400\pi$ or 1256.6 (5 sf) Let side of square be x cm. $x^2+x^2=12^2$ $2x^2=144$ $x^2=72$ $x=\sqrt{72}$ or 8.4853 (5 sf) Two ends = $2\left[\pi(8)^2-\left(\sqrt{72}\right)^2\right]=2[64\pi-72]=128\pi-144$ or 258.12 (5 sf) Four rectangles = $4\left[\sqrt{72}\times 25\right]=100\sqrt{72}$ or 848.53 (5 sf) Total = $400\pi+128\pi-144+100\sqrt{72}$ $=2363.29$ $=2360\text{ cm}^2$ (3 sf)	B1 M1 M1(√) M1(√) A1
13	$2x+3y=49$ $3x+y=56 \Rightarrow y=56-3x$ Sub $y=56-3x$ into $2x+3y=49$ $2x+3(56-3x)=49$ $2x+168-9x=49$ $-7x=-119$ $x=17$ Then, $y=56-3(17)=5$	 B1 – for both equations M1(√) A1 A1
14(a)	$k=30-6-8-5=11$	B1

14(b)	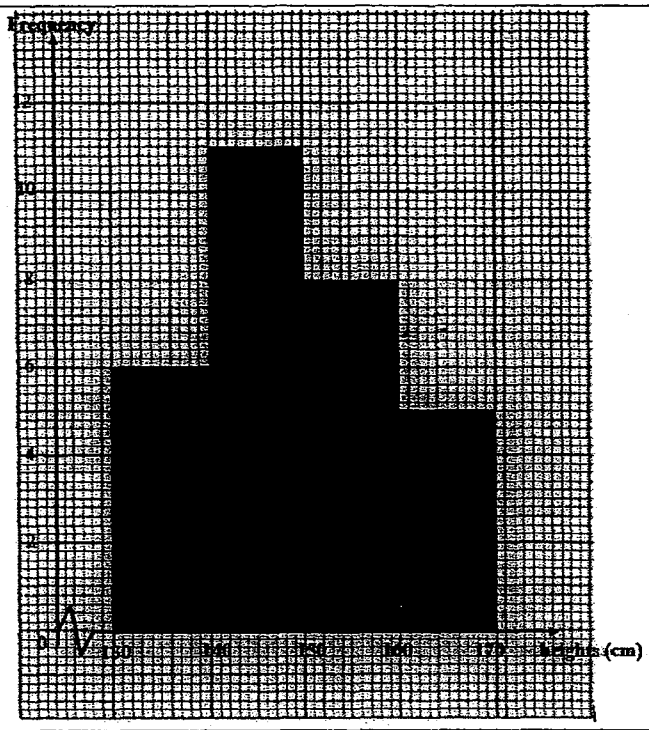	B1 – horizontal axis scale correct, and labelled B1 – all bars correct height
14(c)	A histogram is better than a pie chart because the heights of the histogram represents the frequencies and hence the frequencies can be easily compared at a glance (while the sectors of a pie chart are less easy to compare.)	B1

BEATTY SECONDARY SCHOOL
END-OF-YEAR EXAMINATION 2015

SUBJECT : Mathematics **LEVEL : Sec 2 Express**

PAPER : 2 **DURATION : 1 hour 30 minutes**

SETTER : Mr Ng Choon Cheng **DATE : 08 Oct 2015**

CLASS :	NAME :	REG NO :

READ THESE INSTRUCTIONS FIRST

Write your name, class and index number in the spaces on the top of this page.
Write in dark blue or black pen.
You may use a pencil for any diagrams or graphs.
Do not use staples, paper clips, highlighters, glue or correction fluid.

Answer **all** questions.

If working is needed for any question, it must be shown with the answer.
Omission of essential working will result in loss of marks.
Calculators should be used where appropriate.
If the degree of accuracy is not specified in the question, and if the answer is not exact, give the answer to
three significant figures. Give answers in degrees to one decimal place.
For π, use either your calculator value or 3.142, unless the question requires the answer in terms of π.

At the end of the examination, fasten all your work securely together.
The number of marks is given in brackets [ ] at the end of each question or part question.
The total number of marks for this paper is **50**.

This paper consists of 4 printed pages (including this cover page)

[Turn over

1 The masses, measured to the nearest kilogram, of 20 boys are given below.

57	45	42	48	58
51	45	50	52	57
57	45	46	57	53
44	48	46	43	41

(a) Represent the above data in a split stem-and-leaf diagram. [3]

(b) Find the mean mass. [2]

2 **(a)** An area of 4 cm^2 on a map represents an actual area of 0.36 km^2.
Calculate

(i) the actual area in square kilometres represented by 80 cm^2 on the map, [1]

(ii) the scale of the map in the form 1 : n, [2]

(iii) the distance on the map in centimetres which represents an actual distance of 6 km. [1]

(b) In the diagram below, triangle *ABX* is similar to triangle *CDX*.

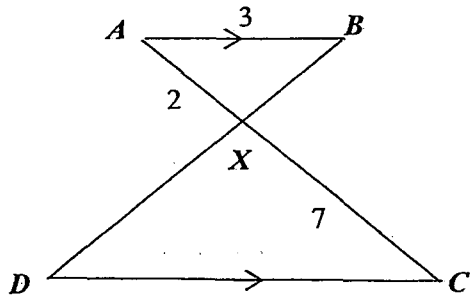

Given that $AB = 3$ cm, $AX = 2$ cm and $CX = 7$ cm, find

(i) the length of *CD*, [2]

(ii) the ratio of $DX : DB$. [1]

3 (a) Simplify $\frac{25xz^2}{3y} \div \frac{5yz^2}{6y^2}$. [2]

(b) Express as a single fraction in its simplest form

$$\frac{6x}{4x^2-1} - \frac{3}{4x-2}$$ [3]

(c) Given that $\frac{p}{r} = \sqrt{\frac{q}{3} + p^2}$, express p in terms of q and r. [3]

4 (a) Using the second Causeway at Tuas, Mr Ng travelled a distance of 600 km from Singapore to Penang in a time of t hours. Write down the average speed of the journey, in km/h, in terms of t. [1]

(b) If Mr Ng reduced his average speed by 5 km/h, he will take 30 minutes more to complete the same journey.
Form an equation in t and show that it reduces to $2t^2 + t - 120 = 0$. [3]

(c) Solve the equation $2t^2 + t - 120 = 0$. [2]

(d) Find the original average speed. [1]

5 In the diagram, AP is perpendicular to BC.

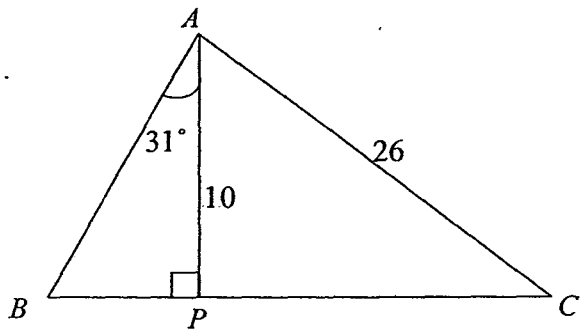

Given that $AP = 10$ cm, $AC = 26$ cm and $\angle BAP = 31°$, calculate

(a) $\angle PAC$, [2]

(b) PC, [2]

(c) PB, [2]

(d) the shortest distance from P to the line AC. [2]

6 Diagram I shows a hollow cone partially filled with water to a height of 24 cm. The cone has a height of 30 cm and a radius of 5 cm.

Formula: Curved surface area of a cone = πrl Surface area of a sphere = $4\pi r^2$

Volume of a cone = $\frac{1}{3}\pi r^2 h$ Volume of a sphere = $\frac{4}{3}\pi r^3$

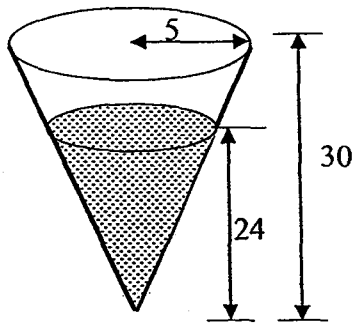

Diagram I

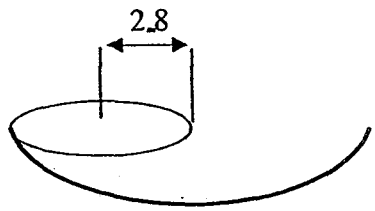

Diagram II

(a) Show that the radius of the water surface is 4 cm. [1]

(b) Find

(i) the volume of the water in the cone, [1]

(ii) the area of the inner surface of the cone in contact with the water. [2]

The water is poured into hemispherical bowls of radius 2.8 cm as shown in Diagram II.

(c) Find the numbers of bowls that is completely filled with water. [3]

7 **Answer the whole of this question on a piece of graph paper.**

The variables x and y are connected by the equation $y = 10 - x - x^2$.

Some corresponding values of x and y are given in the table below.

x	–4	–3	–2	–1	0	1	2	3
y	–2	4	8	10	10	8	4	a

(a) Calculate the value of a. [1]

(b) Taking 2 cm to represent 1 unit on the x-axis and 1 cm to represent 1 unit on the y-axis, draw the graph of $y = 10 - x - x^2$ for $-4 \le x \le 3$. [3]

(c) Use your graph to find

(i) the values of x when $y = 6.2$, [2]

(ii) the value of y when $x = -1.2$. [1]

(d) Write down the equation of the line of symmetry. [1]

☺ One page answer ☺

Qn	Answer	Qn	Answer
1a	stem | leaf 4 | 1 2 3 4 4 | 5 5 5 6 6 8 8 5 | 0 1 2 3 5 | 7 7 7 7 8 Key: 4|1 means 41 kg		
1b	Mean = 49.25 kg	5a	$\angle PAC = 67.4°$ (1 d.p.)
		5b	PC = 24 cm
2ai	Actual area = 7.2 km^2	5c	BP = 6.01 cm (3 s.f.)
2aii	1 : 30000	5d	Shortest distance = $9\frac{3}{13}$ cm
2aiii	Distance on map = 20 cm		
		6	
2bi	$CD = 10.5$ cm	6bi	volume of the water = 402 cm^2
2bii	7:9	6bii	inner surface in contact with the water = 306 cm^2 (3sf)
		6c	Number of hemisphere filled = 8
3a	$10x$	7a	a=-2
3b	$\frac{3}{2(2x+1)}$	7ci	$x = -2.51, x = 1.51$ (+-0.1)
3c	$p = \pm\sqrt{\frac{qr^2}{(3)(1-r^2)}}$	7cii	y = 9.8 **(+-0.2)**
		7d	$x = -0.5$
4a	$\frac{600}{t}$ km/h		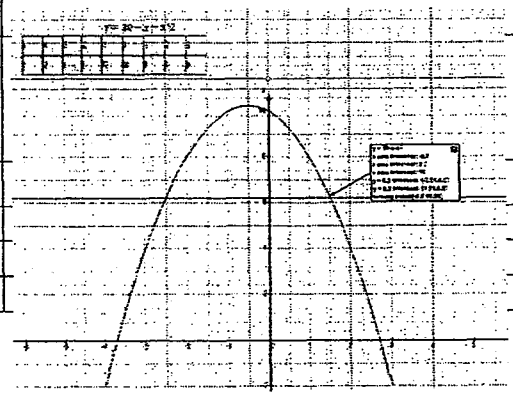
4b	$\frac{600}{t+\frac{1}{2}} = \frac{600}{t} - 5$		
4c	$t = 7.5$ or $t = -8$		
4d	80 km/h		

BEATTY SECONDARY SCHOOL
END-OF-YEAR EXAMINATION 2015

SUBJECT : Mathematics **LEVEL : Sec 2 Express**

PAPER : 2 **DURATION : 1 hour 30 minutes**

SETTER : Mr Ng Choon Cheng **DATE : 08 Oct 2015**

CLASS :	NAME :	REG NO :

READ THESE INSTRUCTIONS FIRST

Write your name, class and index number in the spaces on the top of this page.
Write in dark blue or black pen.
You may use a pencil for any diagrams or graphs.
Do not use staples, paper clips, highlighters, glue or correction fluid.

Answer **all** questions.

If working is needed for any question, it must be shown with the answer.
Omission of essential working will result in loss of marks.
Calculators should be used where appropriate.
If the degree of accuracy is not specified in the question, and if the answer is not exact, give the answer to
three significant figures. Give answers in degrees to one decimal place.
For π, use either your calculator value or 3.142, unless the question requires the answer in terms of π.

At the end of the examination, fasten all your work securely together.
The number of marks is given in brackets [ ] at the end of each question or part question.
The total number of marks for this paper is **50**.

This paper consists of 4 printed pages (including this cover page)

1 The masses, measured to the nearest kilogram, of 20 boys are given below.

57	45	42	48	58
51	45	50	52	57
57	45	46	57	53
44	48	46	43	41

(a) Represent the above data in a split stem-and-leaf diagram. [3]

stem	leaf
4	1 2 3 4
4	5 5 5 6 6 8 8
5	0 1 2 3
5	7 7 7 7 8

Key: 4|1 means 41 kg

M1 Correct labelling and Stem and Leaf.

[2m] Stem and leaf for correct splitting

[1m] for Not splitting or split wrongly

[0 out of 2m] for back to back or non logical stem and leaf

(b) Find the mean mass [2]

Mean = 985 / 20 M1

= 49.25 kg A1

2 **(a)** An area of 4 cm^2 on a map represents an actual area of 0.36 km^2. Calculate

(i) the actual area in square kilometres represented by 80 cm^2 on the map, [1]

Actual area = 0.36 x 20 = 7.2 km^2 B1

(ii) the scale of the map in the form 1 : n, [2]

Map : actual

area 4 cm^2 : 0.36 km^2

dist 2 cm : 0.6 km M1

1 cm: 0.3 km

1 : 30000 A1

(iii) the distance on the map in centimetres which represents an actual distance of 6 km. [1]

Distance on map = $\frac{1}{0.3} \times 6$

= 20 cm B1

(b) In the diagram below, triangle ABX is similar to triangle CDX.

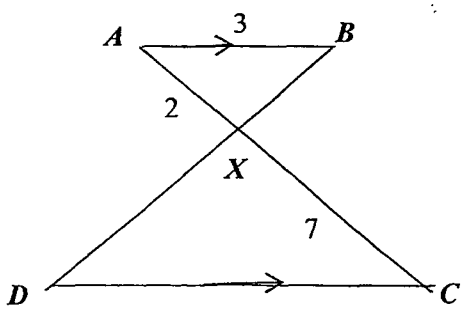

Given that $AB = 3$ cm, $AX = 2$ cm and $CX = 7$ cm, find

(i) the length of CD, [2]

$\frac{2}{7} = \frac{3}{CD}$ M1

$CD = \frac{21}{2}$

$CD = 10.5$ cm A1

(ii) the ratio of $DX : DB$. [1]

7:9

3 (a) Simplify $\frac{25xz^2}{3y} \div \frac{5yz^2}{6y^2}$. [2]

$\frac{25xz^2}{3y} \div \frac{5yz^2}{6y^2} = \frac{25xz^2}{3y} \times \frac{6y^2}{5yz^2}$ M1

$= 10x$ A1

(b) Express as a single fraction in its simplest form

$\frac{6x}{4x^2-1} - \frac{3}{4x-2}$ [3]

$\frac{6x}{4x^2-1} - \frac{3}{4x-2} = \frac{6x}{(2x-1)(2x+1)} - \frac{3}{2(2x-1)}$ M1 (factorise)

$= \frac{2(6x)}{(2x-1)(2x+1)} - \frac{3(2x+1)}{2(2x-1)(2x+1)}$

$= \frac{12x-6x-3}{2(2x-1)(2x+1)}$ M1

$= \frac{6x-3}{2(2x-1)(2x+1)}$

$= \frac{3(2x-1)}{2(2x-1)(2x+1)}$

$= \frac{3}{2(2x+1)}$ A1

(c) Given that $\frac{p}{r}=\sqrt{\frac{q}{3}+p^2}$, express p in terms of q and r. [3]

$\frac{p}{r}=\sqrt{\frac{q}{3}+p^2}$

$\left(\frac{p}{r}\right)^2=\frac{q}{3}+p^2$ M1 (square)

$\frac{p^2}{r^2}-p^2=\frac{q}{3}$

$\frac{p^2-r^2p^2}{r^2}=\frac{q}{3}$

$\frac{p^2(1-r^2)}{r^2}=\frac{q}{3}$ M1 (factorisation)

$p^2(1-r^2)=\frac{qr^2}{3}$

$p^2=\frac{qr^2}{(3)(1-r^2)}$

$p=\pm\sqrt{\frac{qr^2}{(3)(1-r^2)}}$ or $p=\pm\sqrt{\frac{qr^2}{(3)(1-r^2)}}$ or $p=\pm\sqrt{\frac{qr^2}{(3-3r^2)}}$ A1

4 (a) Using the second Causeway at Tuas, Mr Ng travelled a distance of 600 km from Singapore to Penang in a time of t hours. Write down the average speed of the journey, in km/h in terms of t. [1]

(a) $\frac{600}{t}$ km/h B1

(b) If Mr Ng reduced his average speed by 5 km/h, he will take 30 minutes more to complete the same journey.
Form an equation in t and show that it reduces to $2t^2+t-120=0$. [3]

(b) $\frac{600}{t+\frac{1}{2}}=\frac{600}{t}-5$ M1

$\frac{600}{\left(\frac{2t+1}{2}\right)}=\frac{600-5t}{t}$

$\frac{1200}{2t+1}=\frac{600-5t}{t}$ M1

$1200t=(600-5t)(2t+1)$

$1200t=1200t+600-10t^2-5t$

$10t^2+5t-600=0$

$2t^2+t-120=0$ A1

(c) Solve the equation $2t^2 + t - 120 = 0$. [2]

$2t^2 + t - 120 = 0$

$(2t - 15)(t + 8) = 0$ M1

$t = 7.5 \quad or \quad t = -8$ A1

(d) Find the original average speed. [1]

When $t = 7.5\ hrs$

Origianl Speed $= \dfrac{600}{7.5}$

$= 80$ km/h (Only) B1

5 In the diagram, AP is perpendicular to BC. Given that $AP = 10$ cm, $AC = 26$ cm and $\angle BAP = 31^\circ$, calculate

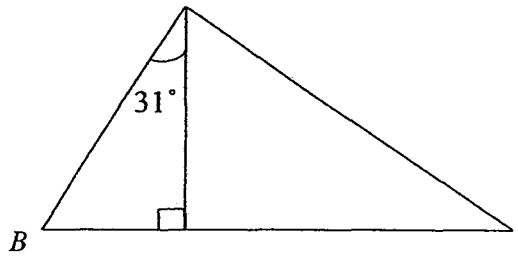

(a) $\angle PAC$, [2]

$\cos\angle PAC = \dfrac{10}{26}$ M1

$\angle PAC = 67.380^\circ$

$= 67.4^\circ$ (1 d.p.) A1

(b) PC, $\tan 67.380 = \dfrac{PC}{10}$ [2]

$PC^2 = 26^2 - 10^2$ or $\tan 67.380 = \dfrac{PC}{10}$ or $\sin 67.380 = \dfrac{PC}{26}$ M1

PC = 24 cm A1

(c) PB, [2]

$\tan 31^\circ = \dfrac{BP}{10}$ M1

BP = 6.0086

= 6.01 cm (3 s.f.) A1

(d) the shortest distance from P to the line AC. [2]

$Area\ of\ triangle = \dfrac{1}{2} \times (24)(10)$

$= 120$

Shortest distance $= \dfrac{120 \times 2}{26}$ M1

$= 9\dfrac{3}{13}$ or 9.230769

$= 9\dfrac{3}{13}$ or 9.23 cm A1

6 Diagram I shows a hollow cone partially filled with water to a height of 24 cm. The cone has a height of 30 cm and a radius of 5 cm.

Formula: Curved surface area of a cone = πrl Surface area of a sphere = $4\pi r^2$

Volume of a cone = $\frac{1}{3}\pi r^2 h$ Volume of a sphere = $\frac{4}{3}\pi r^3$

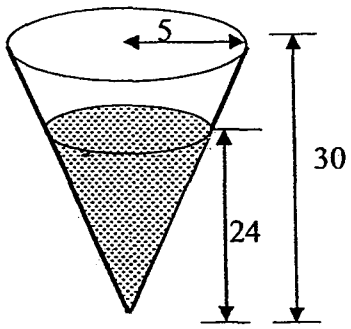

Diagram I

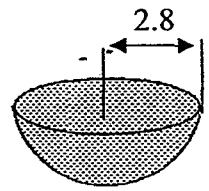

Diagram II

(a) Show that the radius of the water surface is 4 *cm*. [1]

$\frac{24}{30} = \frac{r}{5}$

$r = 4\text{cm}$ B1

(b) Find

(i) the volume of the water in the container, [1]

volume of the water = $\frac{1}{3}(\pi)(4^2)(24)$

$= 402.123$

$= 402 \text{ cm}^2$ B1

(ii) the area of the inner surface of the cone in contact with the water. [2]

Slanted height = $\sqrt{4^2 + 24^2}$

$= \sqrt{592}$ M1

$= 24.331$

inner surface in contact with the water

$= \pi \times 4 \times \sqrt{592}$

$= 305.75$

$= 306 \text{ cm}^2$ (3sf) A1

The water is poured into hemispherical bowls of radius 2.8 cm as shown in Diagram II.

(c) Find the numbers of bowls that is completely filled with water. [3]

Volume of hemisphere = $\frac{2}{3} \times \pi \times 2.8^3$ M1

$= 45.976$

Number of hemisphere filled = $\frac{402.123}{45.976}$ M1(Follow thro from B(i) and vol)

$= 8.746$

7 A1

7 Answer the whole of this question on a piece of graph paper.

The variables x and y are connected by the equation $y = 10 - x - x^2$.

Some corresponding values of x and y are given in the table below.

(a) Given that $y = 10 - x - x^2$, calculate the values of a. [1]

x	–4	–3	–2	–1	0	1	2	3
y	–2	4	8	10	10	8	4	a

a = -2 B1

(b) Taking 2 cm to represent 1 unit on the x-axis and 1 cm to represent 1 units on the y-axis, draw the graph of $y = 10 - x - x^2$ for $-4 \le x \le 3$. [3]

G1 Correct scale, G1 Correct plot, G1 Smooth graph

(c) Using your graph, find

(i) the value of x when $y = 6.2$. [2]

$x = -2.51, x = 1.51$ (+-0.1)

(ii) The value of y when x = −1.2. [1]

y = 9.8 **(+-0.2)**

(d) Write down the equation of the line of symmetry of the graph. [1]

$x = -0.5$ A1

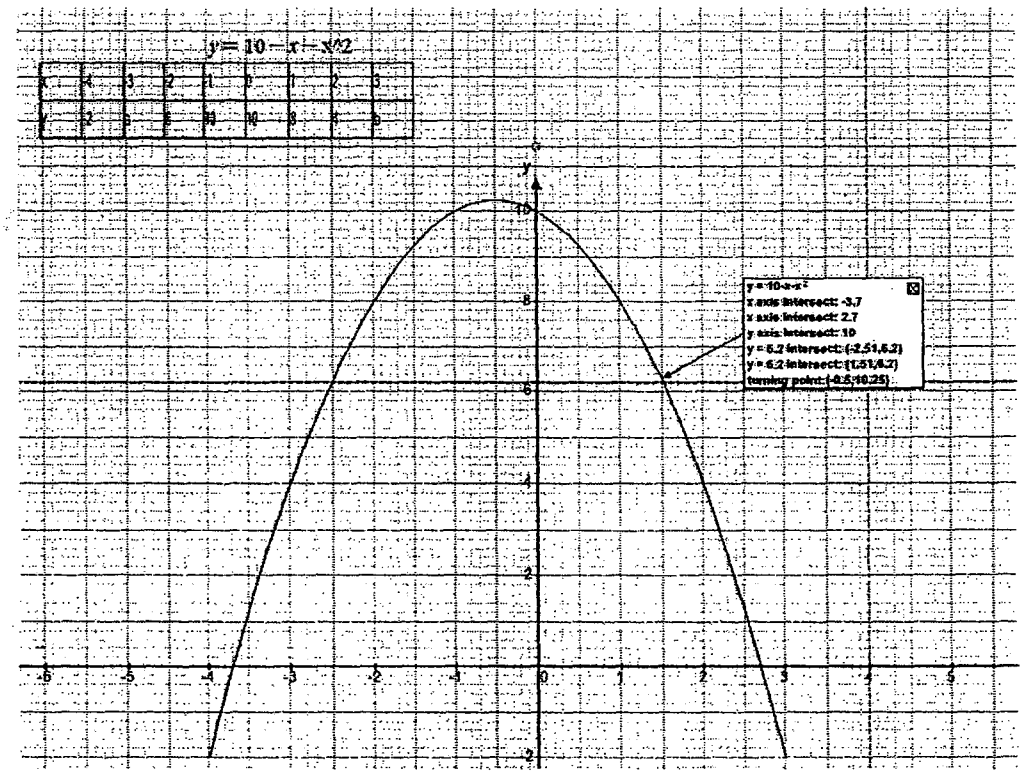

~ THE END ~